Product Data Sheet
March 2019
IP2045, Rev EB

Mobrey Ultrasonic

MSP422, MSP400RH, and MSP900GH Level Transmitters

- Non-contacting measurement with no moving parts
- Integral LCD and push-buttons as standard for on-site programming
- Continuous measurement of level or distance-to-surface.
- Volume or open channel flow calculations for the Mobrey MSP400RH and MSP900GH
- Two integral signal relays for the Mobrey MSP400RH
- Easy to install and configure
- Rugged metal or plastic housing. PVDF wetted material
- Two-wire direct current loop-powered

Overview of the Mobrey MSP422/400RH/900GH

Mobrey MSP422

Mobrey MSP400RH

Mobrey MSP900GH

Measurement principle

The Mobrey MSP Series is a liquid level transmitter based on ultrasonic technology that is suitable for many liquid applications.

Ultrasonic pulse signals are transmitted and reflected from the liquid surface. The transmitter 'listens' for reflected signals (echoes) and measures the time-delay between transmitting and receiving. The distance to the liquid surface is automatically calculated using the computed time-delay.

An integral temperature sensor continuously measures the air temperature around the transmitter. It then computes the speed of sound in air, automatically compensating the Distance for temperature effects. The MSP400RH and MSP900GH have a Remote Temperature Sensor option.

The distance measurement can be sent through the 4–20 mA or HART® output.

Features and benefits

- Eliminates problems experienced with contacting instrumentation
- Simple set-up and operation
- Minimal maintenance after installed
- Low cost of installation and commissioning
- Process downtime minimized
- Non-contacting measurement with no moving parts
- Two integral signal relays
- Corrosion resistant PVDF wetted material
- Two-wire 24 V direct current loop-powered
- M20 x 1.5 conduit entries, single or dual depending on model
- Operating range to 36 ft. (11 m)
- Measures liquid height, distance to liquid, volume, or flow in open channels
- Simple push button programming
- Built-in LCD display
- Automatic temperature compensation

Contents

Overview of the Mobrey MSP422/400RH/900GH ..... page 2
Mobrey MSP422 Level Transmitter ..... page 4
Mobrey MSP400RH Level Transmitter ..... page 4
Mobrey MSP900GH Level Transmitter ..... page 4
MSP Series Accessories ..... page 4
Specifications ..... page 5
Product Certifications ..... page 8
Dimensional Drawings ..... page 9

Special features

Advanced software features

- Learn routine (false echo registration)

  The transmitter can learn to ignore up to four false echoes caused by the pulse signal reflecting off obstructions, until the actual level is seen.

- Empty tank mapping

  When a tank is empty, the transmitter can learn to ignore up to four false echoes, without the need for user interaction.

- Present depth

  The bottom reference can be automatically set using a known user-entered depth.

- Set as empty

  When the tank is empty, the bottom reference can be automatically reset to the measured distance.

- Distance offset

  The distance to the surface can be adjusted by a user-entered positive or negative offset value.

- Level offset

  The level can be adjusted by a user-entered positive or negative offset value

- Bottom blanking

  The transmitter can be set to ignore an area of the tank bottom to avoid false echoes from obstructions.

Remote Temperature Sensor Option
(For MSP400RH and MSP900GH)

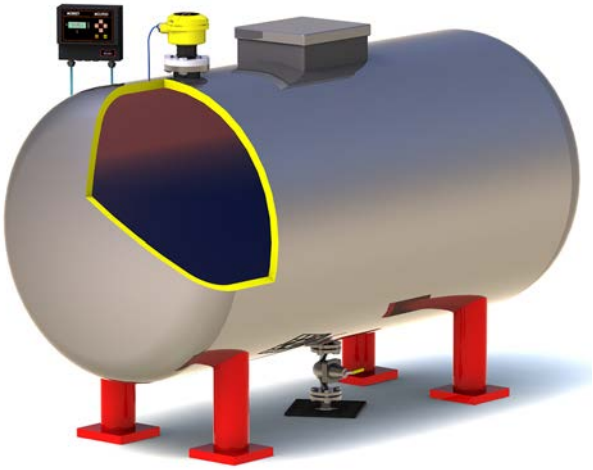

Level Measurement with a Mobrey MSP400RH Transmitter and a Mobrey MCU900 Series Control Unit

Applications

- Storage tank levels, open channel flow, effluent pits, reservoir level, buffer tanks, and more

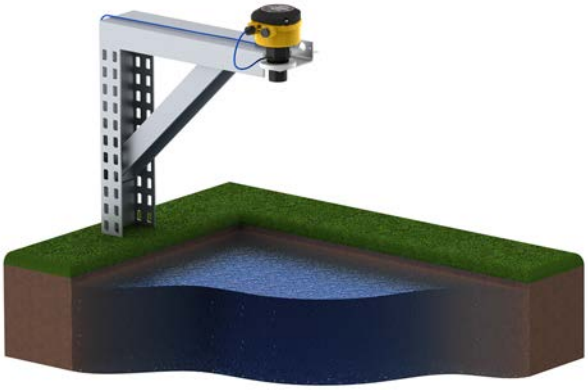

Open Channel Flow Measurement with a Mobrey MSP900GH Transmitter

Choosing the right model

- Each MSP Series transmitter has been designed for a specific purpose, as shown in the table here:

Transmitter Purpose	Model	Range
Simple level measurement	MSP422 MSP400RH	26-ft. (8 m) 36-ft. (11 m)
Level measurement and local relays	MSP400RH	36-ft. (11 m)
Level measurement in hazardous areas	MSP900GH	36-ft. (11 m)
Open channel flow or volume measurement	MSP400RH MSP900GH	36-ft. (11 m) 36-ft. (11 m)

Mobrey MSP422 Level Transmitter

Table 1. MSP422 ordering information

Model	Product Description
MSP422	Ultrasonic Level Transmitter 4–20mA
Process Connection	
N2[1]	2-in. NPT thread
B2[2]	2-in. BSPT thread
Wetted Material	
8	PVDF
Typical Model Number: MSP422 - B2 8	

(1) Choosing this option implies US (Imperial) units of measurement are required for the default configuration. The configuration can be changed on-site.

(2) Choosing this option implies Metric units of measurement are required for the default configuration. The configuration can be changed on-site.

Mobrey MSP400RH Level Transmitter

Table 2. MSP400RH ordering information

Model	Product Description
MSP400R	Ultrasonic Level Transmitter with 2 integral relays
Signal Output	
H	4–20 mA with HART communication
Process Connection	
N2[1]	2-in. NPT thread
B2[2]	2-in. BSPT thread
Wetted Material	
8	PVDF
Typical Model Number: MSP400R H - B2 8	

(1) Choosing this option implies US (Imperial) units of measurement are required for the default configuration. Configuration can be changed on-site.

(2) Choosing this option implies Metric units of measurement are required for the default configuration. Configuration can be changed on-site.

Mobrey MSP900GH Level Transmitter

Table 3. MSP900GH ordering information

Model	Product Description
MSP900G	Ultrasonic Level Transmitter for hazardous areas
Signal Output	
H	4–20 mA with HART communication
Process Connection and Approval	
A	2-in. BSPT thread, PVDF wetside, and ATEX approved Intrinsically Safe
Typical Model Number: MSP900G H - A	

MSP Series Accessories

Table 4. MSP Series accessories ordering information

Accessories	
MSP-FLG5	2-in. BSPT to PN16 DN50, PVC Flange
MSP-BRK3[1]	2-in. NPT Mounting Bracket
MSP-BRK2[1]	2-in. BSPT Mounting Bracket
MSP-RTP	Remote Temperature Sensor (Mobrey MSP400RH and Mobrey MSP900GH only)

(1) See "Dimensional Drawings" on page 9.

Specifications

General

Products

- Mobrey MSP422 Ultrasonic Transmitter:
  Level and Distance measurement
- Mobrey MSP400RH Ultrasonic Transmitter:
  Level, Distance, Content (Volume), and Flow measurement, with two integral signal relays
- Mobrey MSP900GH Ultrasonic Transmitter:
  Level, Distance, Content (Volume), and Flow measurement for hazardous locations

Measurement principle

- Ultrasonic, time-of-flight

Measuring performance

Measurement range

- Mobrey MSP422: 1 to 26 ft. (0,3 to 8 m)
- Mobrey MSP400RH: 1 to 36 ft. (0,3 to 11 m)
- Mobrey MSP900GH: 1 to 36 ft. (0,3 to 11 m)

Blanking distance (dead zone)

- 12 in. (0,3 m)

Level resolution

- Better than 0.06 in. (1 mm)

Level accuracy under reference conditions(1)

- MSP422:
  ± 0.2 in. (5 mm) for < 3.3 ft. (1 m),
  ± 0.5% of measured distance for > 3.3 ft. (1 m)
- MSP400RH and MSP900GH:
  ± 0.1 in. (2,5 mm) < 3.3 ft (1 m),
  ± 0.25% of measured distance for > 3.3 ft. (1 m)

Update interval

- Display: 500 ms
- Current Output: 200 ms

Display and configuration

Integral display

- 4/5 digit display for live measurement, and for configuration purposes

Output units

- For Level or distance-to-surface: m, ft, in, or none
- For Contents: l, m^3, gal, ft^3, or none
- For Flow:
  l/s, l/m, m^3/hr, gal/s, gal/m, ft^3/m (cfm), ft^3/hr, or none

Output variables

- MSP422: Level or distance-to-surface
- MSP400RH:
  Level (or distance-to-surface), Content (Volume), and Flow
- MSP900GH:
  Level (or distance-to-surface), Content (Volume), and Flow

Configuration tools

- Standard integral push-buttons with LCD
- Field Communicator
- Mobrey MCU900 Series Universal Control Unit

Electrical

Power supply

- Loop-powered (two-wire)
- Mobrey MSP422: 12 to 30 Vdc
- Mobrey MSP400RH: 12 to 40 Vdc
- Mobrey MSP900GH:
  12 to 40 Vdc (non-hazardous area),
  12 to 30 Vdc (hazardous area)

Earthing

- None required

Current output

- MSP422: Analog 4–20 mA
- MSP400RH and MSP900GH: Analog 4–20 mA, HART

Signal on alarm

- Low = 3.6 mA. High = 21 mA

Saturation levels

- Low = 3.8 mA. High = 20.5 mA

Relay output (MSP400RH)

- Two integral signal relays, SPST rated 1A @ 30 Vdc (inductive) and 2A @ 30 Vdc (resistive)

(1) Temperature: 68 °F (20 °C), Pressure: 1013 mbar (atmospheric pressure), Relative Humidity: 50%, calm and stable water surface.

Electrical parameters (MSP900GH)

- U_i = 30 V, I_i = 120 mA, P_i = 0,82 W, L_i = 108 μH, C_i = 0 nF

Cable entry

- Two M20 x 1.5 conduit entries for cable glands

Output cabling

- Single twisted-pair and shielded,
  min. 0,22 mm^2 (24 AWG),
  max. 1,5 mm^2 (15 AWG)

Physical specifications

Materials selection

- Delta Mobrey provides a variety of product with various product options and configurations including materials of construction that can be expected to perform well in a wide range of applications. The product information presented is intended as a guide for the purchaser to make an appropriate selection for the application. It is the purchaser's sole responsibility to make a careful analysis of all process parameters (such as all chemical components, temperature, pressure, flow rate, abrasives, contaminants, etc.), when specifying product, materials, options and components for the particular application. Delta Mobrey Limited is not in a position to evaluate or guarantee the compatibility of the process fluid or other process parameters with the product, options, configuration or materials of construction selected.

Materials used in construction

Wet-side material

- PVDF

Body and cover material

- Glass-filled nylon

Cover seal

- Silicone rubber

Cover screws

- 316 Stainless Steel

Transducer body seal

- EPDM

Mechanical

Mounting thread size

- 2-in. NPT, or 2-in. BSP. Optional flange accessories available

Weight of transmitter

- MSP422: 2.0 lb (0,9 kg)
- MSP400RH: 2.2 lb (1,0 kg)
- MSP900GH: 3.1 lb (1,4 kg)

Measuring

Temperature compensation(1)

- MSP422: Automatic Integral temperature compensation
- MSP400RH: Automatic Integral temperature compensation. Optional remote temperature sensor for dynamic temperature compensation
- MSP900GH: Automatic Integral temperature compensation. Optional remote temperature sensor for dynamic temperature compensation

Environment

Ambient temperature(2)

- MSP422:
  –4 to 158 °F (–20 to 70 °C)
- MSP400RH:
  –40 to 158 °F (–40 to 70 °C)
- MSP900GH:
  –40 to 140 °F (–40 to 60 °C)

Process temperature

- MSP422:
  –4 to 158 °F (–20 to 70 °C)
- MSP400RH and MSP900GH:
  –22 to 158 °F (–30 to 70 °C)

Process pressure:

- –4 to 44 psi (–0,25 to 3,0 bar)

Ingress protection

- IP 66/67 (when using supplied cable gland/blanking plug)

Electromagnetic compatibility

- EN61326 (Class B)

Certifications

- CE-mark, FM, ATEX (dependent on order code)

(1) See Table 4 on page 4 for optional accessories.
(2) See page 8 onwards for approval temperature ranges.

Temperature and pressure ratings

The process temperature/pressure rating depends on the design of the transmitter in combination with the flange materials.

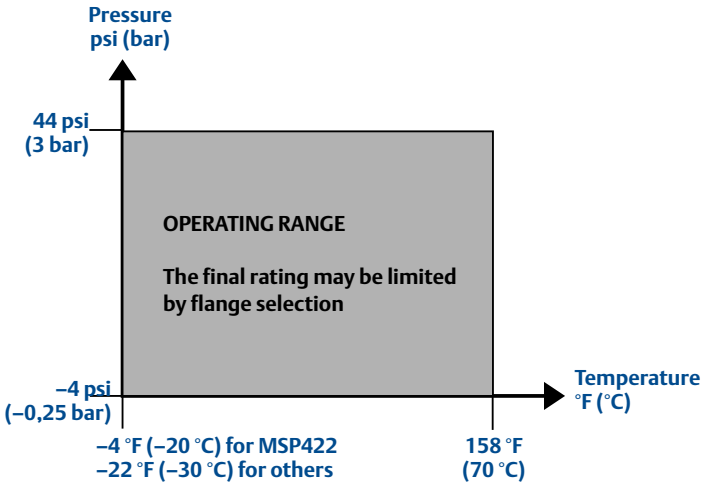

Process Temperature And Pressure Diagram For Mobrey MSP422, MSP400RH and MSP900GH

Load limitations

A Field Communicator requires a minimum load resistance of 250 Ohm within the loop in order to function properly. Communication with Mobrey MCU900 Series Control Unit does not require additional resistance. The maximum load resistance can be determined from these diagrams:

Non-Intrinsically Safe Installations

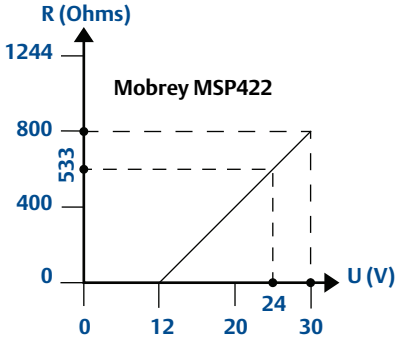

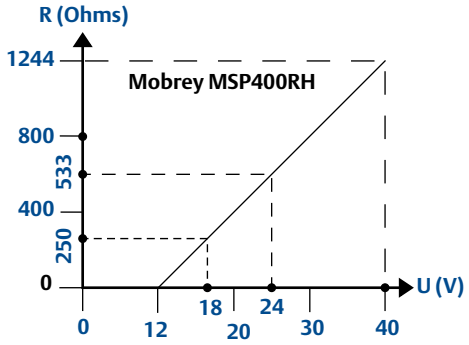

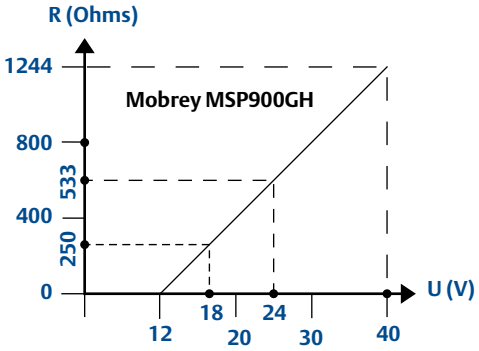

Intrinsically Safe Installations

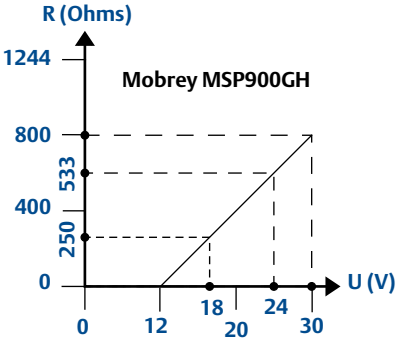

Note
R = Maximum Load Resistance
U = External Power Supply Voltage

Product Certifications

Approved manufacturing locations

- Delta Mobrey Limited
  - Slough, United Kingdom

European directive information

The EC declaration of conformity certificate may be obtained by contacting your local sales office.

ATEX directive (94/9/EC)

- The MSP900GH complies with the ATEX directive

Pressure equipment directive (PED) (97/23/EC)

- The MSP Series is outside the scope of the PED directive

Electro magnetic compatibility (EMC) directive

- EN 61326-1:2006, EN 61326-2.3:2006

CE-mark

- MSP422 (EMC)
- MSP400RH (EMC)
- MSP900GH (EMC, ATEX)

Ordinary locations certification (Mobrey MSP422 and MSP400RH only)

American certification

Factory Mutual (FM) ordinary locations approval

Project ID: 3015615
The transmitter has been examined and tested to determine that the design meets basic electrical, mechanical, and fire protection requirements by FM, a nationally recognized testing laboratory (NRTL) as accredited by the Federal Occupational Safety and Health Administration (OSHA).

Hazardous locations certification (Mobrey MSP900GH only)

European certification

ATEX intrinsically safe approval

Certificate number: SIRA 02ATEX2405X
ATEX intrinsic safety (Mobrey MSP900GH only)
II 1 G
Ex ia IIC T6 Ga (T_a –40 to 55 °C)
Ex ia IIC T4 Ga (T_a –40 to 60 °C)
Ui = 30 V, Ii = 120 mA, Pi = 0.82 W, Li = 108 µH, Ci = 0 µF

Special conditions for safe use

1. All transmitter models have external plastic parts, which could present a risk of ignition due to electrostatic charge build-up. They shall not be directly installed in any process where its enclosure might be charged by the rapid flow of non-conductive media.
2. All transmitter models shall only be cleaned with a damp cloth.
3. When the transmitter housing uses aluminum alloy in its construction, this presents a risk of ignition due to impact and shall be taken into consideration on installation and use.

Dimensional Drawings

Threaded mounting (MSP422)

Note: Dimensions are in inches (mm).

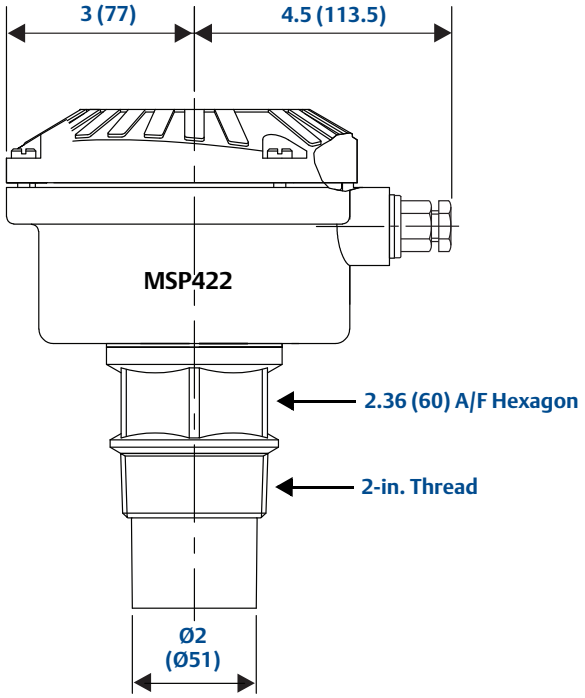

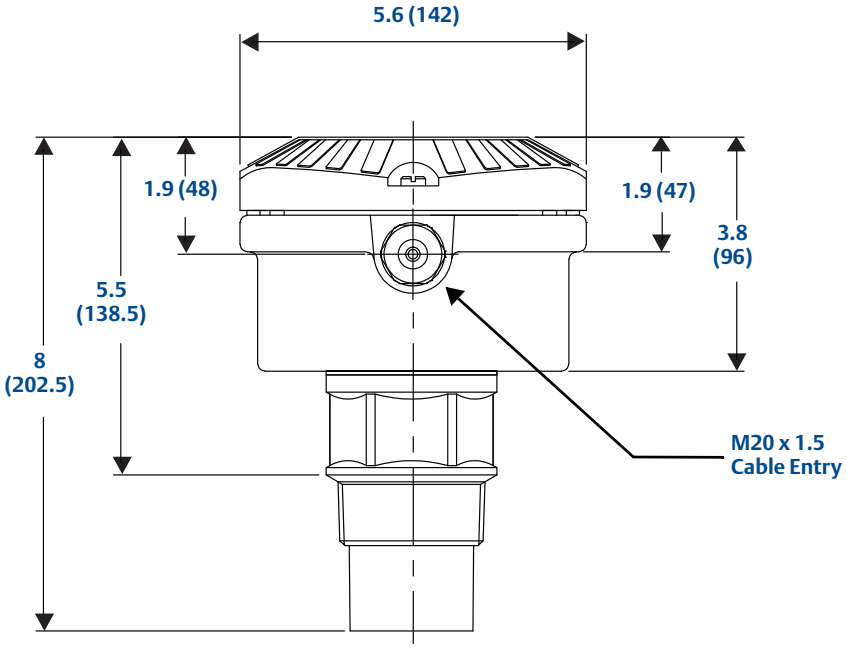

Threaded mounting (MSP400RH/MSP900GH)

Note: Dimensions are in inches (mm).

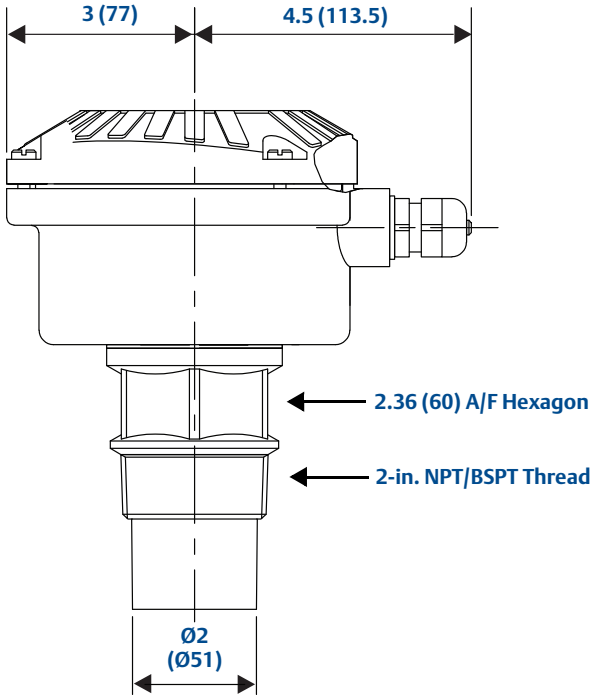

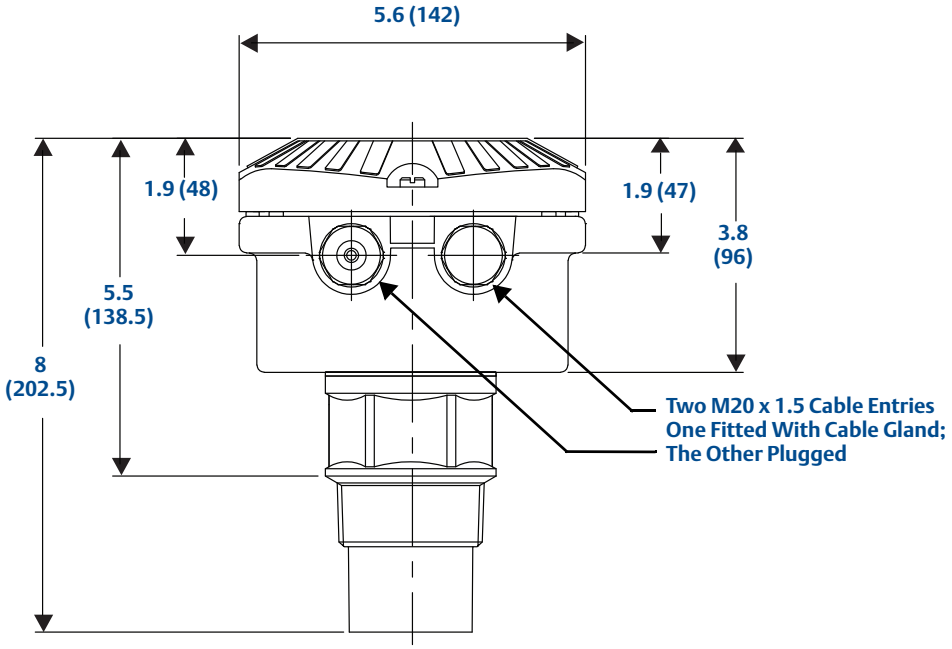

2-in. NPT/BSPT bracket kits

Note: Dimensions are in inches (mm).

Note: The combined weight of bracket and disc is 16 oz. (0,5 kg).

SIDE VIEW

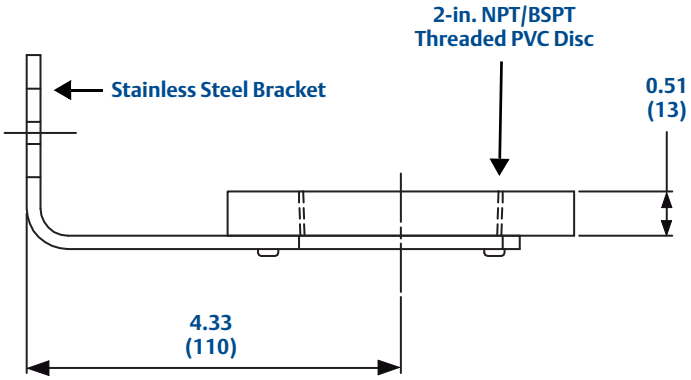

END VIEW

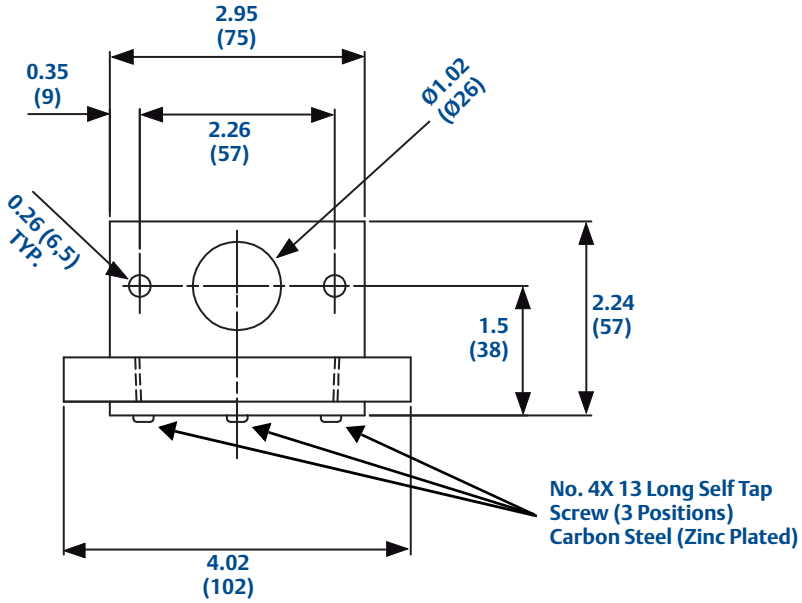

ACTUAL VIEW WITH TRANSMITTER MOUNTED

Linkedin.com/company/delta-mobrey-ltd

Twitter.com/DeltaMobreyUK

Facebook.com/DeltaMobreyUK

Head Office

Delta Mobrey Limited
Riverside Business Park, Dogflud Way,
Farnham, GU9 7SS, UK

+44 (0)1252 729140
+44 (0)1252 729168
mobrey@delta-mobrey.com

Standard Terms and Conditions of Sale can be found at:
www.delta-mobrey.com

delta-mobrey